1.

3.

2.

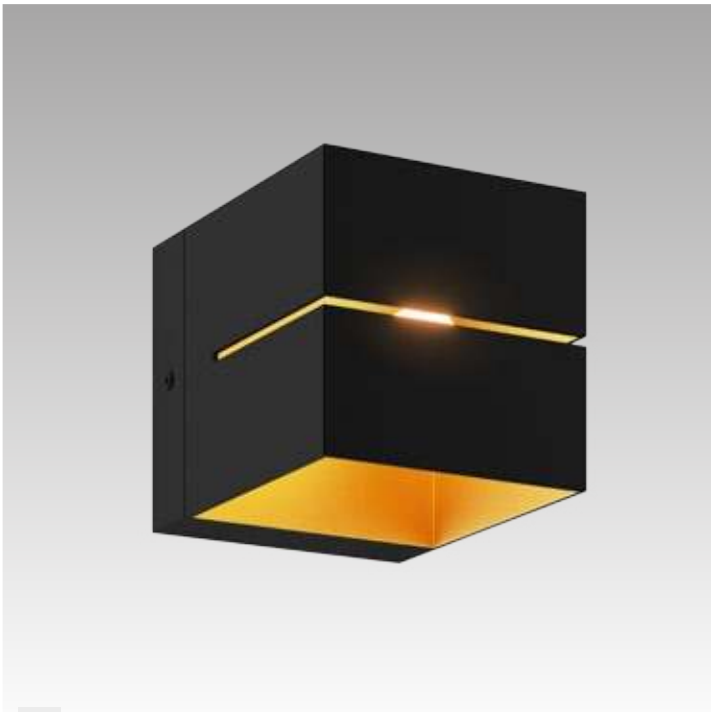

4.

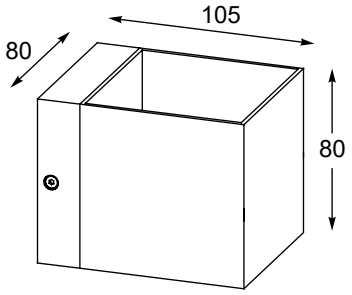

TRANSFER WL
Wall lamp
1. 90842 (black)
1xG9 MAX 40W
aluminium full black

2. 90841 (white)
1xG9 MAX 40W
aluminium full white

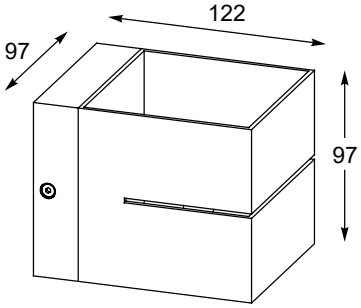

TRANSFER WL 2
Wall lamp
3. 91066 (white)
1xG9 MAX 40W
aluminium full white

4. 91067 (black)
1xG9 MAX 40W
aluminium black
outside+gold inside